Congr. Int. en Ing. Electrónica. Mem. ELECTRO, Vol. 39, pp. 103-108, Oct 2017, Chihuahua, Chih. México
http://electro.itchihuahua.edu.mx/memorias_electro/MemoriaElectro2017.zip
ISSN 1405-2172

SLIDING MODE CONTROL OF CURRENT IN A NON-INVERTER BUCK BOOST CONVERTER FOR NON-CONVENTIONAL MACHINING

Martínez-Alvarado Ricardo[1], Granda-Gutiérrez Everardo Efrén[2], Hernández-Rodríguez Alejandra[1], García-Mejía Juan Fernando[2]

[1]Corporación Mexicana de Investigación en Materiales S. A. de C. V., Gerencia de Desarrollo Humano, Calle Ciencia y Tecnología No. 790, Col. Saltillo 400, Saltillo, Coahuila, C. P. 25290

[2]Universidad Autónoma del Estado de México
Instituto Literario No. 100, Col. Centro, Toluca, Estado de México, C. P. 50000

ricardo.martinez@comimsa.com

RESUMEN

La propuesta de una fuente de poder pulsada con control de corriente basada en una topología de convertidor Buck-Boost No Inversor (NIBBC) y un esquema de control por modos deslizantes (SMC) es presentado en este trabajo. El diseño es pensado en aplicaciones que requieren asistencia con descargas eléctricas, tales como plasma, Maquinado Electroquímico (ECM), Maquinado por electroerosión (EDM) y ECDM (Maquinado por descarga asistido con electroquímico). La fuente de poder pulsada se compone de dos partes; la primera es el convertidor en modo con control de corriente y la segunda es un circuito utilizado para pulsar la señal del voltaje de salida del convertidor hacia la carga, este último permite configurar la frecuencia y el ciclo de trabajo que operara en la carga.

Palabras clave: control en modo deslizante, convertidor Buck-Boost no inversor, fuente de poder pulsado, manufactura no convencional

ABSTRACT

The proposal of a pulsed power source with control current based on a Non-Inverter Buck-Boost Converter (NIBBC) topology and sliding mode control (SMC) is presented in this work. This design is intended for applications that require assistance with electric shocks, such as plasma, Electrochemical Machining (ECM) Electro Discharge Machining (EDM) and ECDM (Electro-Chemical Discharge Machining). The pulsed powers source is constituted of two parts: a converter in current control mode and a circuit used to pulse the output voltage signal from the converter towards the load, which allows to set up the frequency and duty cycle that will operates in the load.

Keywords: sliding mode control, non-inverting buck-boost converter, pulsed power supply, non-convectional manufacturing

1. INTRODUCTION

Modern applications of pulse generators require of a high repetition rate, high reliability and long lifetime. The design of a reliable generator will depend of specific application requirements. Some applications are mentioned in [1] where also it is mentioned that the size of the generator is according to the quantity of energy that is required to storage every single pulse. Nowadays, pulse generators have produced new focus in military, nuclear, manufacturing and plasmas systems.

According to [2] the pulsed power is a scheme where the stored energy is discharged like electric energy to a load in short pulses with a controllable rate. It is used when the load requires this kind of energy (pulsed) or in a process which improves when the load is pulsed. These schemes are based in two stages: an energy storage system and a coupling system which addresses the stored energy towards the load, mainly through a power switch.

Within some applications in non-conventional manufacturing requiring pulsed power are: ECM [3], EDM[4] and ECDM [5]. The base technique is ECM, being an electrochemical dissolution process of the anode, namely, the workpiece, dissolved according to the Faraday's Law. The applications for this process are increasing because of the intrinsic advantage over the conventional machining: there is not wear in the tool, regardless of material hardness [3]. Other studies about ECM are presented in [6] y [7], where the development of customized pulsed power sources to work in ECM were exposed.

EDM is a process in which stored energy is discharged to the workpiece becoming thermal energy; a high temperature is reached at the discharge point, melting the material [4]. A variety of studies exist to explain the development of power source for EDM, as presented in [8]. Half bridge commuted with zero crossing technique is used for drilling operations [9]. In other example, an interleaved buck topology was designed with the aim to store the energy in more than one inductance at the time before directing it to the load [10].

For the case of the pulsed power source for ECDM, there is a significant study in [11] that introduces a power source that can be used either for ECDM, EDM or ECDM and describes in detail the control strategy for this prototype which includes the buck and boost topologies.

Other works are oriented to design and implement plasma sources as described in [12]-[15]. Author assumes that plasma can be seen as a capacitive effect, thus, it is possible to consider an inductance to store energy, and use a current source. The

proposal in [14] consists in a buck-boost converter to achieve the pulsed power source, showing up satisfactorily results.
Upon literature review it is concluded that power systems for non-conventional manufacturing require a constant current for: 1) to achieve a constant current density level in ECM and 2) to produce electrical sparks avoiding the transition to arc regime in ECDM or EDM. Thus, we propose that it is possible to use a Non-inverter Buck-Boost Converter to be applied as current power converter by using a sliding mode control scheme to effectively adjust the electrical parameters in the intermediate stage of a pulsed power supply.

2. DESIGN OF THE PROPOSED TOPOLOGY

The buck-boost is a DC (Direct Current) converter that can produce a wide range of output voltage. It has the peculiarity that its output voltage is the reverse sign of the input; meanwhile, the non-inverter buck-boost converter (NIBBC) produces output voltage of the same polarity. Figure 1 shows the topology of NIBBC, where E denotes the constant input voltage, Q the power transistor, L the inductance, D the diodes, C the output capacitor and R the system load. It is considered a switched power source, like boost and buck converters, where the output voltage amplitude is a function of the duty cycle of the switching element. The main goodness of this type of converter is that it can be used to either, amplify or reduce, the voltage with respect to its input voltage. For the specific application in this research, the effect of the buck behavior is used as a current source and the effect of the boost behavior is used to set the value of the output voltage.

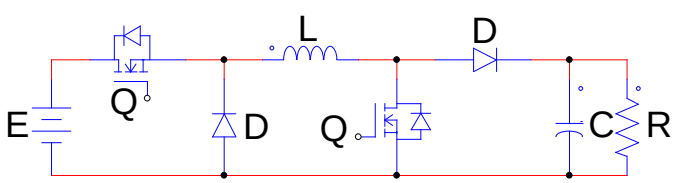

Figure 1 Scheme of the NIBBC

2.1. Modeling of the NIBBC

A direct modeling methodology was used to define the NIBCC behavior: the state of the switch (or switches) is set to a fixed position and then the equations are obtained in its differential mode for the circuit. The model is obtained through the application of the Kirchhoff's Law and two conditions are considered: 1) the converter is unidirectional and 2) switches are activated and deactivated at the same time.
The positions of the switches must be combined to work with a single model (see Figure 2). This is possible because the position of the switches is treated like a binary set {0,1} that indicates if the switching elements are "turned on" or "turned off". This binary set should not be confused with the input control of the system u and neither with average control input u_{av}. In other words: $u \in \{0,1\}$ and $u_{av} \in [0,1]$.The converter is considered like a second order system [16]-[19], where the gain of the circuit can be grater or smaller than 1. The configuration of the NIBBC assumes that the components are ideal and its dynamics is described by state-space representation.

$$L\frac{di}{dt} = -(1-u)v + uE \tag{1}$$
$$C\frac{dv}{dt} = (1-u)i - \frac{v}{R} \tag{2}$$

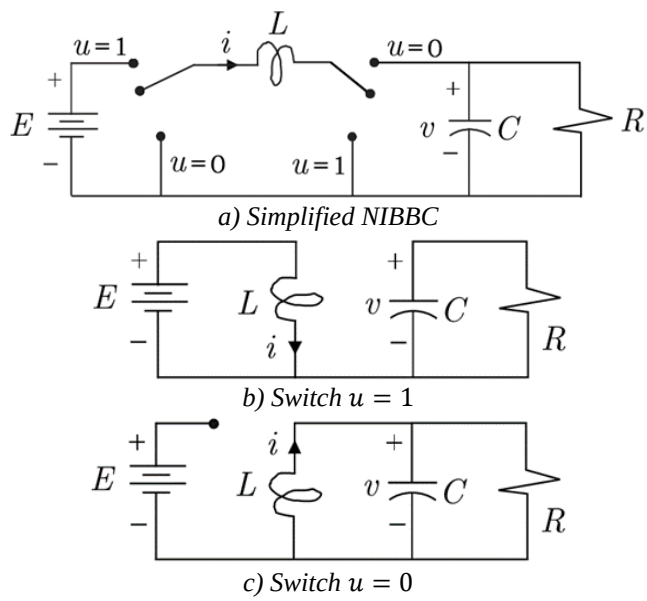

Figure 2 Ideal representation of the commutation sequence in the NIBBC. Figure adopted from [17].

It is assumed that when the switch is turned on ($u = 1$), the charging period is occurring and the coil L stores energy. When $u = 0$, the discharge period starts and the energy stored in L is directed towards the capacitor C and the load R. The model presented in (1) and (2) considers these two conditions, for this reason it is considered as a combined model. Making use of the common notation for state-space variables it is possible to have the representation as is expressed in (3) and (4):

$$L\dot{x_1} = -(1-u)x_2 + uE \tag{3}$$
$$C\dot{x_2} = (1-u)x_1 - \frac{x_2}{R} \tag{4}$$

2.2. Equilibrium point and Static Transfer Function

The aim of the control is regulating the output voltage in the converter to an average desired level that is taken as a reference or a signal constant. This is achieved through an adequate control law u. Since the u is the signal that commute the switches to the on and off state, this value can be seen like as the value for a PWM (Pulse Width Modulation) signal. So it can be considered as an equivalent control signal u. This is very useful when interpreting the control scheme under a regime of

sliding modes, where the transition from current to voltage mode occurs naturally. In general, it is desirable to relate the average values of the system to values that are the equilibrium points of the system at steady state. These relationships are important because they correspond to the static characteristics of the converter. A way to approximate the equilibrium points for the system is expressed in [19], which consists in making the system states equal to zero and solve for the other state variables. It means that to know the states x_1 and x_2 it must be solved $\dot{x}_1 = 0$ and $\dot{x}_2 = 0$ as follows. When a system does not explicitly depend on time t, i.e.:

$$\dot{x} = f(x) \tag{5}$$

it is said that it is a invariant in time system or autonomous. The concept of equilibrium point says that when $x = x^*$ in the state-space, then, every time that the system starts with an initial condition x^* the response of the system will be x^* for all future time. For the autonomous system presented in (5), the equilibrium points are the real roots of the system

$$f(x) = 0 \tag{6}$$

In this sense and with base on the last two definitions, it is required to solve:

$$0 = -(1-u)\bar{x}_2 + uE \tag{7}$$
$$0 = (1-u)\bar{x}_1 - \frac{\bar{x}_2}{R} \tag{8}$$

It has been used the $\bar{x}_1$ and $\bar{x}_2$ notation to identify the variables of the equilibrium points. According to (7) is obtained that:

$$\bar{x}_2 = \frac{u}{(u-1)}E \tag{9}$$

and from (8) is achieved:

$$\bar{x}_1 = \frac{\bar{x}_2}{R}\left[\frac{\bar{x}_2}{E} + 1\right] \tag{10}$$

In the same way, to know the static equilibrium point for the system u_{av} it is assumed that $u_{av} = \bar{u}$ and replacing it in (7) it is reduced in the form:

$$\bar{u} = \frac{\bar{x}_2}{E+\bar{x}_2} \tag{11}$$

Now, it is defined the static transfer function making $u_{av} = U$, in the form $H(U)$, which in a normalized way is reduced in the form:

$$H(U) = \bar{x}_2 = \frac{U}{(U-1)} \tag{12}$$

It is observed that with values where $U > 0.5$ the converter works as a "step up" and when $U < 0.5$ works as a "step down" converter as observed in Figure 3.

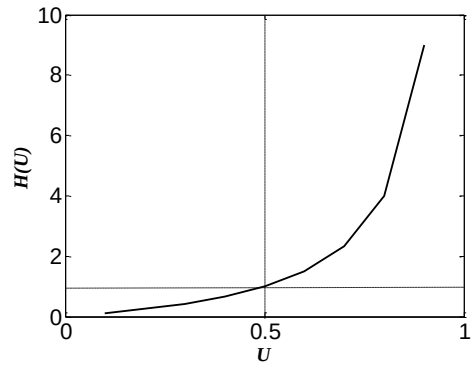

Figure 3 Response of the Transfer Function of static gain.

2.3. Sliding Mode Direct Control

In a similar procedure as presented in [16]-[18], the SMC (Sliding Mode Control) applied to a converter must provide high robustness to external disturbances. The aim in this control scheme is to make the current converge to a reference current x_d. A sliding surface s is defined as:

$$s = x_1 - \bar{x}_1 \tag{13}$$

where $x_1$is the current in the inductor I_L and x_{1d} is the reference current I_{Lref}. Where $\bar{x}_1$ can be compute as in (10).
To assure that the signal x_1 follows to the signal $\bar{x}_1$ it must be assuring that:

$$s = x_1 - \bar{x}_1 = 0 \tag{14}$$

thus, $x_1 = \bar{x}_1$. The value for the u_{av} it should be obtained when solving for $\dot{s} = 0$, where:

$$\dot{s} = \dot{x}_1 - \dot{\bar{x}}_1 = 0 \tag{15}$$

as $\dot{\bar{x}}_1$ is a constant value given by (14),

$$\dot{s} = \dot{x}_1 = 0 \tag{16}$$

Due to the converter operation and as demonstrated in the static transfer function:

$$0 < u_{eq} = \frac{\bar{x}_2}{E+\bar{x}_2} < 0.5 \tag{17}$$

and the control law is designed with the form:

$$u = \frac{1}{2}\left(1 - sign\,(s)\right) \tag{18}$$

making that $x_1 = \bar{x}_1$, i. e.:

$$u = \frac{1}{2}\left(1 - sign\,(x_1 - \bar{x}_1)\right) \tag{19}$$

where x_1 is the real current in the inductor i, which means that $I_{ref} = \bar{\imath}$. It is important to say that the control u_{av} represents the duty cycle d that controls the boost factor, which according to the transfer function $0 < d < 0.5$ because is required that in the part of buck converter $x_1 \simeq \bar{x}_1$ in the sliding mode control task.

3. RESULTS

3.1. Simulation results

To validate the model and its control law, a code segment was programed in MATLAB. It was used an 'ode45' solver. The parameter simulated are as follows: $E = 120\,V$, $L = 100\,\mu H$, $C = 100\,\mu F$, $R = 4\,\Omega$, $\bar{x}_2 = 60\,V$ and $\bar{x}_1 = \frac{\bar{x}_2}{R}\left[\frac{\bar{x}_2}{E} + 1\right] = 22.5\,A$. As it is shown in Figure 4, the SMC strategy reach the equilibrium points as a function of the desired voltage value, i. e. the equilibrium or establishment of the current is a function of the desired voltage, makes that the response converge satisfactorily. The response indicates that with a 33.39 % of duty cycle d, is possible to commute the switch power component reaching convergence to the desired value.

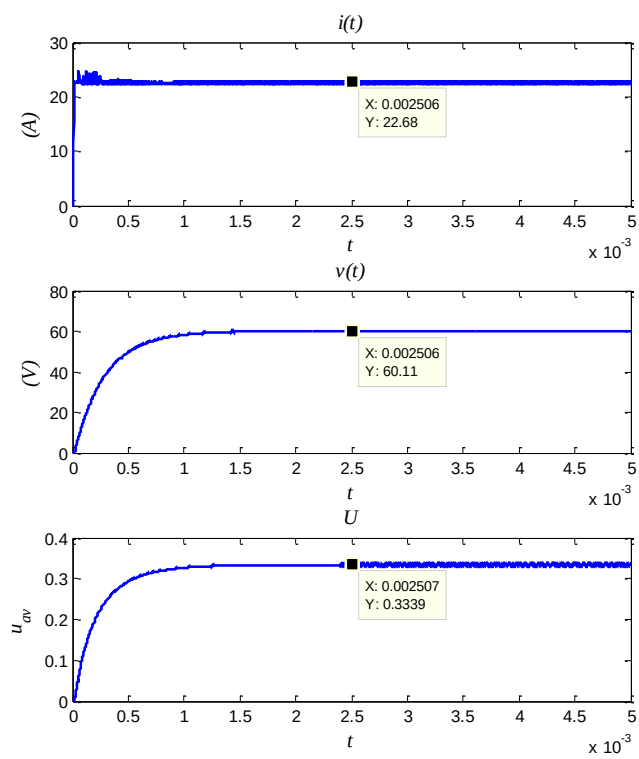

Figure 4 NIBBC with SMC regulated in the equilibrium point

As a confirmation of the MATLAB solver, a simulation was implemented in PSIM: a) in open loop to validate the duty cycle with a carrier signal in a frequency of 20 kHz and b) in closed loop to validate the SMC.

Figure 5 shows the circuit for a simulation in open loop, whose electric signals are shown in Figure 6, where can be observed that it is possible to assign de value of the duty cycle to operate the NIBBC and the current in the load (I_{RL}) is established in a value of 15 A (the expected value given that the desired voltage is 60 V , V_{RL}). The current in the inductance (I_{sen}) oscillates around 22.5 A with $\pm 10\,A$, because there is not yet a control system. It is convenient to mention that all simulated values agree with typical conditions during a real machining process.

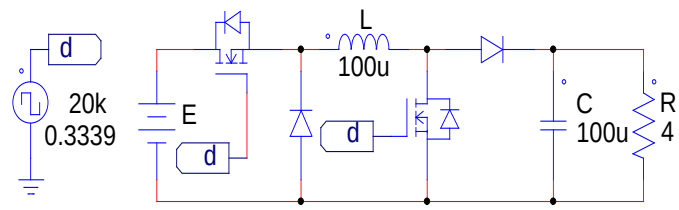

Figure 5 Electrical scheme for the NIBBC in PSIM

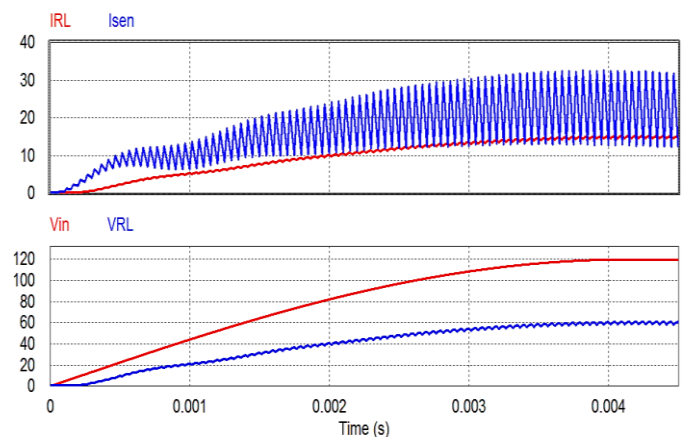

Figure 6 Results for the simulation in PSIM in open loop`

When the SMC scheme is implemented in PSIM (Figure 8) it can be observed from the Figure 9 that the current in the inductor follows to the current reference $(I_{sen} \simeq I_{ref} = 22.5\,A)$ while the current in the load $I_{RL} = 15\,A$ according to the Ohm's Law.The current in the inductor (I_{sen}) presents the effect of 'chattering' (the ripple in I_L). Also, in the same figure it is shown that the output voltage $(V_{out}\ and\ V_{RL})$ follows to the desired voltage V_d.Figure 7 shows the behavior of the control signal u which represents the time that it lasts on the both switches in the converter making possible the convergence in the establishment values. Moreover, it is presented the sliding surface, which confirms the convergence to this surface.

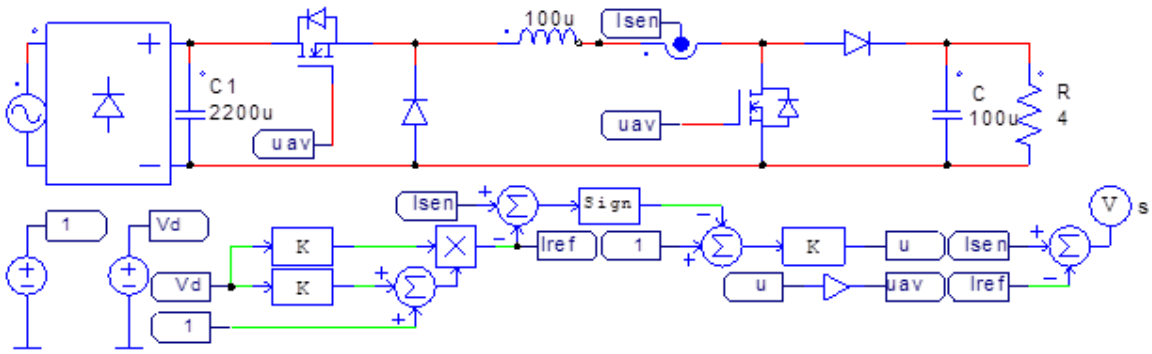

Figure 8 Electrical scheme for the NIBBC with SMC

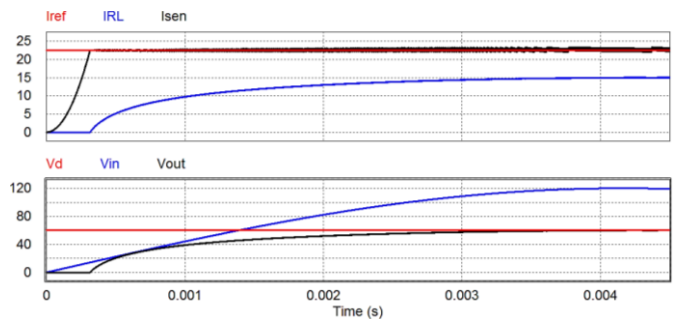

Figure 9 Results for the simulation of the NIBBC in closed loop (regulation task)

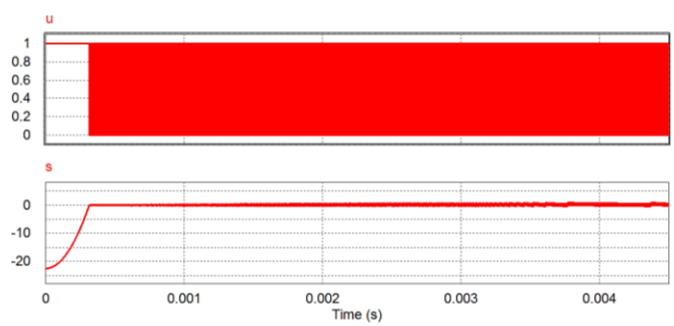

Figure 10 Control signal u and sliding surface s

3.2. Approximation for the switched load

Considering the application of the proposed converter in non-conventional machining process, a power source able to manipulate both: voltage and current, is required. In the shown simulations, was given an important information to perform the regulation in a converter with the aim to be used in this kind of applications. The last section showed the simulation considering a load of 4Ω, but in a real machining application the load is not a constant and presents a non-linear behavior. The characterization of this load is a research topic still in progress. Some models consider the R_L found in [11], [14], [15] and [20]. The model used in this study is like the presented in [14] and [15], where a plasma resistance is assumed in a simple way.

This model consists of a very small capacitor in parallel with a high value resistor, connected in parallel through a switch with a resistance of a low ohmic value. In this model, the high value resistance plays the role of a low conductivity and when the switch is activated, a high conductivity state is reached due to the low value of the other load resistor (Figure 11).

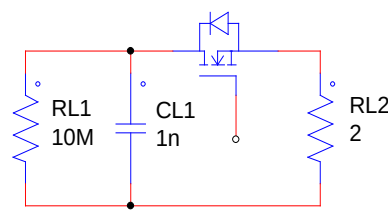

Figure 11 Plasma load model. Adapted from [15].

Following with the above mentioned, it is also easier to assume that the operation of the switch that is involved in the plasma model is the component that will help us to define the period T and the duty cycle t_{on}, therefore, the t_{off} it will be known. The values used for the simulation with the load are as follows: $E = 120\,V$, $L = 100\,\mu H$, $C = 100\,\mu F$, $\bar{x}_2 = 50\,V$, $R_{L1} = 10\,M\Omega$, $R_{L2} = 2\,\Omega$, $C_L = 1\,nF$, $T = 2\,kHz$ and $d = 40\,\%$.

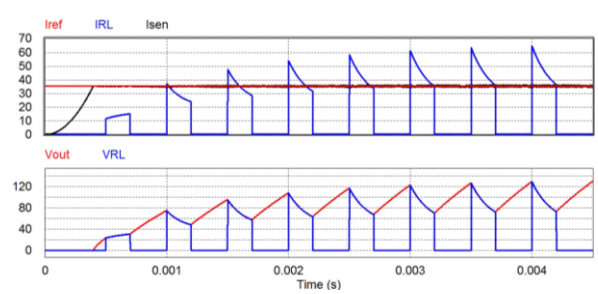

Figure 12 Simulation results with plasma load model

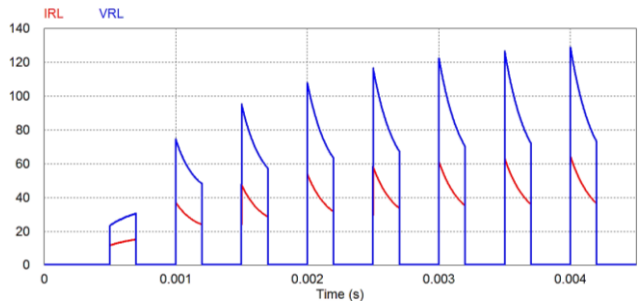

Figure 13 Load current and voltage

The results (Figure 12 and 12) shows the behavior of the currents considering a non-linear load, as can be seen, the current in the inductance (I_{sen}) follows the current reference (I_{ref}) and because the non-linearity in the load, the current in the load (I_{RL}) present peaks of current that exceeds the current reference. The voltage signals show a similar behavior, where because of the switching load the output voltage is like a sawtooth and the voltage in the load cuts the output voltage.

4. CONCLUSIONS

From the simulation results, the SMC scheme shows a fast response and it converges to the desired point. It is highlighted the robustness property even when there is a non-linear load connected to the converter, because the current in the inductor can follow the reference current.

The simulated values agree with previous observations realized in the Electro-Machining Laboratory tested in open loop at 24 V and reaching values around 22 A in consumption current for drilling operations. With the proposal of this study, it will be possible to work in closed loop with a constant value of current which is better to achieve a material removal rate stable. Moreover, practical values observed in a ECDM prototype showed that values of $60\ V$, reaching current peaks exceeding $40\ A$. Thus, simulated values correspond with real machining conditions, which allows to assume that the proposed scheme will work in a real system. This will be proven in future research.

The scope of this study was to present a regulation strategy in current mode for purposes of pulsed current applications. This was achieved by the implementation under simulation of a SMC, resulting in versatile working parameters for current and output voltage which can be modified selecting the appropriate passive components of inductance and capacitance, as it is expected in typical switching applications.

REFERENCES

[1] Akiyama, H., Sakai, S., Sakugawa, T., Namihira, T., "Environmental Applications of Repetitive Pulsed Power", IEEE Transactions on Dielectrics and Electrical Insulation, 2007, vol. 14, no. 4, pp. 825-833.

[2] Bluhm, H., "Pulsed power systems. Principles and applications", Ed. Springer 2006. ISBN: 3-540-26137-0.

[3] Rajurkar, K. P., et al. "New developments in electro-chemical machining", CIRP Annals-Manufacturing Technology, 1999, vol. 48, no. 2, pp. 567-579.

[4] Ho, K. H., and Newman S. T. "State of the art electrical discharge machining (EDM)", International Journal of Machine Tools and Manufacture, 2003, vol. 43, no. 13, pp. 1287-1300.

[5] Paul, Lijo, and Somashekhar S. Hiremath. "Experimental and Theoretical Investigations in ECDM Process–An Overview", Procedia Technology, 2016, vol. 25 pp. 1242-1249.

[6] Liu W., Huang Z., Guo Z. (2012) "Design and Implementation of High-Frequency and Single Polar Pulse Generator for High-Power Electrochemical Machining Application", In: Chen R. (eds) 2011 International Conference in Electrics, Communication and Automatic Control Proceedings. Springer, New York, NY

[7] Spieser, A. and Ivanov, "Design of a pulse power supply unit for micro-ECM", The International Journal of Advanced Manufacturing Technology, 2015, vol. 78, no. 1, pp. 537.

[8] B. Sen, N. Kiyawat, P. K. Singh, S. Mitra, J. H. Ye and P. Purkait, "Developments in electric power supply configurations for electrical-discharge-machining (EDM)", The Fifth International Conference on Power Electronics and Drive Systems, 2003. PEDS 2003, vol. 1, pp. 659-664

[9] H. Huang, J. Bai, Z. Lu y Y. Guo, "A Zero Current Switching Half-Bridge Power Supply for High Speed Drilling Electrical Discharge Machining", on Power and Energy Engineering Conference, 2009. APPEEC 2009. Asia-Pacific, 2009.

[10] L. Ray-Lee, H. Cheng-Ching y C. Shih-Kuen, "Interleaved Four-Phase Buck-Based Current Source With Center-Tapped Energy-Recovery Scheme for Electrical Discharge Machining", IEEE Transactions on power electronics, 2011, vol. 26, no. 1, pp. 110-118.

[11] D. Tastekin, H. Krotz, C. Gerlach and J. Roth-Stielow, "A novel electrical power supply for electrothermal and electrochemical removal machining methods", IEEE Energy Conversion Congress and Exposition, San Jose, CA, 2009, pp. 2682-2688.

[12] S. Zabihi, F. Zare and H. Akiyama, "Using a current source to improve efficiency of a plasma system", IEEE Pulsed Power Conference, Washington, DC, 2009, pp. 1256-1260

[13] S. Zabihi, F. Zare, G. Ledwich, A. Ghosh and H. Akiyama, "A Novel High-Voltage Pulsed-Power Supply Based on Low-Voltage Switch–Capacitor Units", in IEEE Transactions on Plasma Science, 2010, vol. 38, no. 10, pp. 2877-2887.

[14] S. Zabihi, F. Zare, G. Ledwich, A. Ghosh and H. Akiyama, "A new generation of high voltage pulsed power converters", 2010 20th Australasian Universities Power Engineering Conference, Christchurch, 2010, pp. 1-5.

[15] S. Zabihi, F. Zare, G. Ledwich, A. Ghosh and H. Akiyama, "A new pulsed power supply topology based on positive buck-boost converters concept", in IEEE Transactions on Dielectrics and Electrical Insulation, 2010, vol. 17, no. 6, pp. 1901-1911.

[16] Sira-Ramírez, H., Hernández-Méndez, A., Linares-Flores, J. et al., "Robust flat filtering DSP based control of the boost converter", Control Theory and Technology, 2016, vol. 14, no. 3, pp. 224-236.

[17] Sira-Ramírez, Hebertt and Silva-Ortigoza, Ramón, "Control Design Techniques in Power Electronics Devices" Ed. Springer 2013. ISBN: 9788578110796

[18] Rogelio, Baray A and Jose, Villarreal Ch., "Control por modos deslizantes directo modo de corriente del convertidor z-source", Congreso Internacional de Ingeniería Electrónica, ELECTRO 34, Chihuahua 2012, pp. 108-114.

[19] Hassan K. Khalil, “Non linear systems”, 3a ed. Prentice Hall 2002, ISBN: 0-13-067389-7.

[20] Minh Dang Nguyen, Mustafizur Rahman and Yoke San Wong, "Modeling of radial gap formed by material dissolution in simultaneous micro-EDM and micro-ECM drilling using deionized water", International Journal of Machine Tools and Manufacture, 2013, vol. 66, pp 95-101